APPROVED BY:

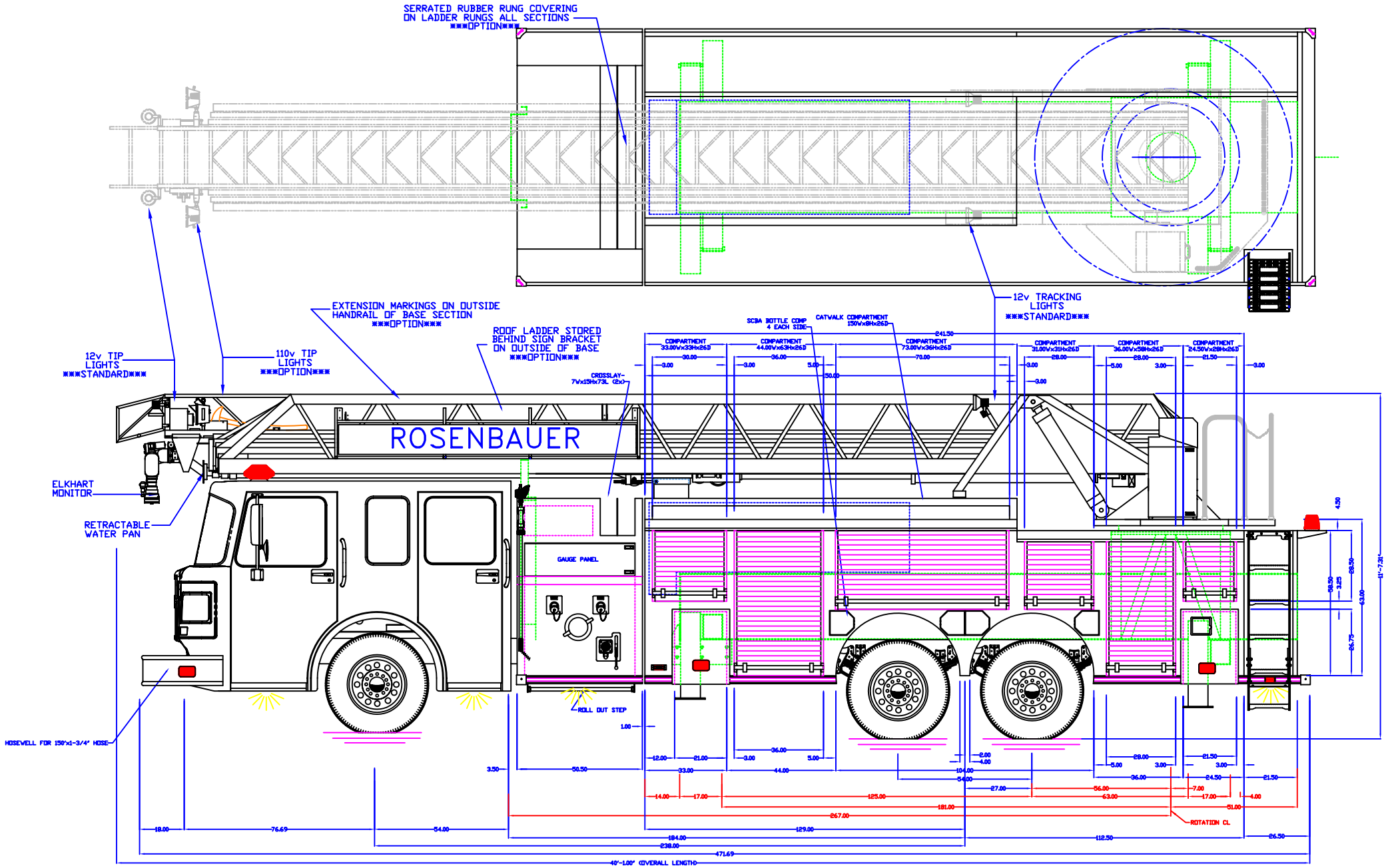

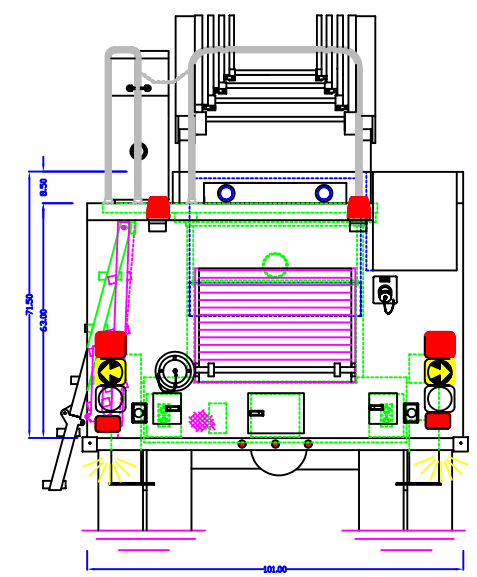

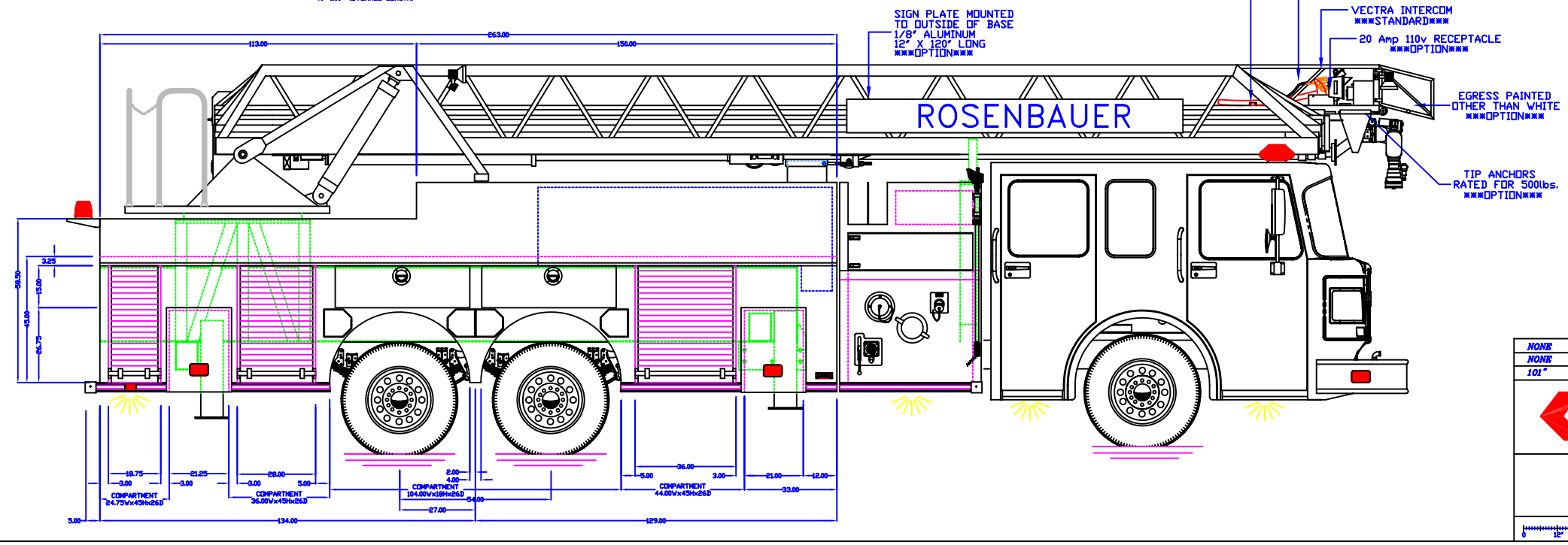

NOTE: LADDER- 109' RK MFG

TANK CAP- 500 GAL POLYPROPYLENE

PUMP CAP- 2000 GPM

DIMENSIONS SHOWN ARE APPROXIMATE AND ARE SUBJECT TO MINOR DEVIATIONS DURING CONSTRUCTION

NOT ALL ITEMS IN SPECS ARE SHOWN ON THIS PRINT

COMPARTMENT INTERIORS SPATTER PAINT

SIDE PUMP PANELS BLACK THERMO PLASTIC

NFPA UPPER LIGHT PACKAGE- CODE 3
NFPA LOWER LIGHT PACKAGE- CODE 3

HOSEBED- 60 CU FT CAP

8KV SMART POWER GENERATOR INSTALLED

NONE	MAXIMUM HEIGHT	DATE 3-28-07	DFTR -	DFTR -
NONE	MAXIMUM LENGTH		ENGINEER -	ENGINEER -
101"	BODY WIDTH			

rosenbauer

7196 AERIAL DEMO
109' AERIAL

0 12" 24" SCALE REF. ONLY

DRAWING NAME: 7196- 109' aerial demo